SHADOW D - SERIES

CONSTRUCTION MANUAL

RUDDER, FIN ,ELEVATOR, TAILPLANE CONSTRUCTION

SERIES D-D

RUDDER - FIN - ELEVATOR - TAILPLANE

The tailplane components are constructed from either alloy or wooden ribs and gussets, bonded and/or rivetted onto leading and trailing edges.

Alloy components are pre-formed, the wooden gussets and ribs are to be formed from supplied and pre-marked plywood sheets and wood.

Take care and ensure symmetry of the control surfaces when bonding and rivetting.

After inspection the control surfaces are covered with polyester fabric, suitably doped.

FIGURE 27

BOOM FITTINGS - TAILPLANE COMPONENTS

PART No.	QTY.	PART DESCRIPTION	NOTE	PROCESS REF.
F197	1	Teleflex Bracket		
F218	2	Backing Plate		
F219	2	Backing Plate		
F179	1	Teleflex Bracket		
F315	2	Bracket - Wire		
T104	2	Control Stop Rudder		
T107	2	Support Rudder Stop		
T108	3	Tail Pins	*	
T109	2	Pad Elevator Stop	*	

* Fit and drill where necessary at tail assembly.

FIGURE 27

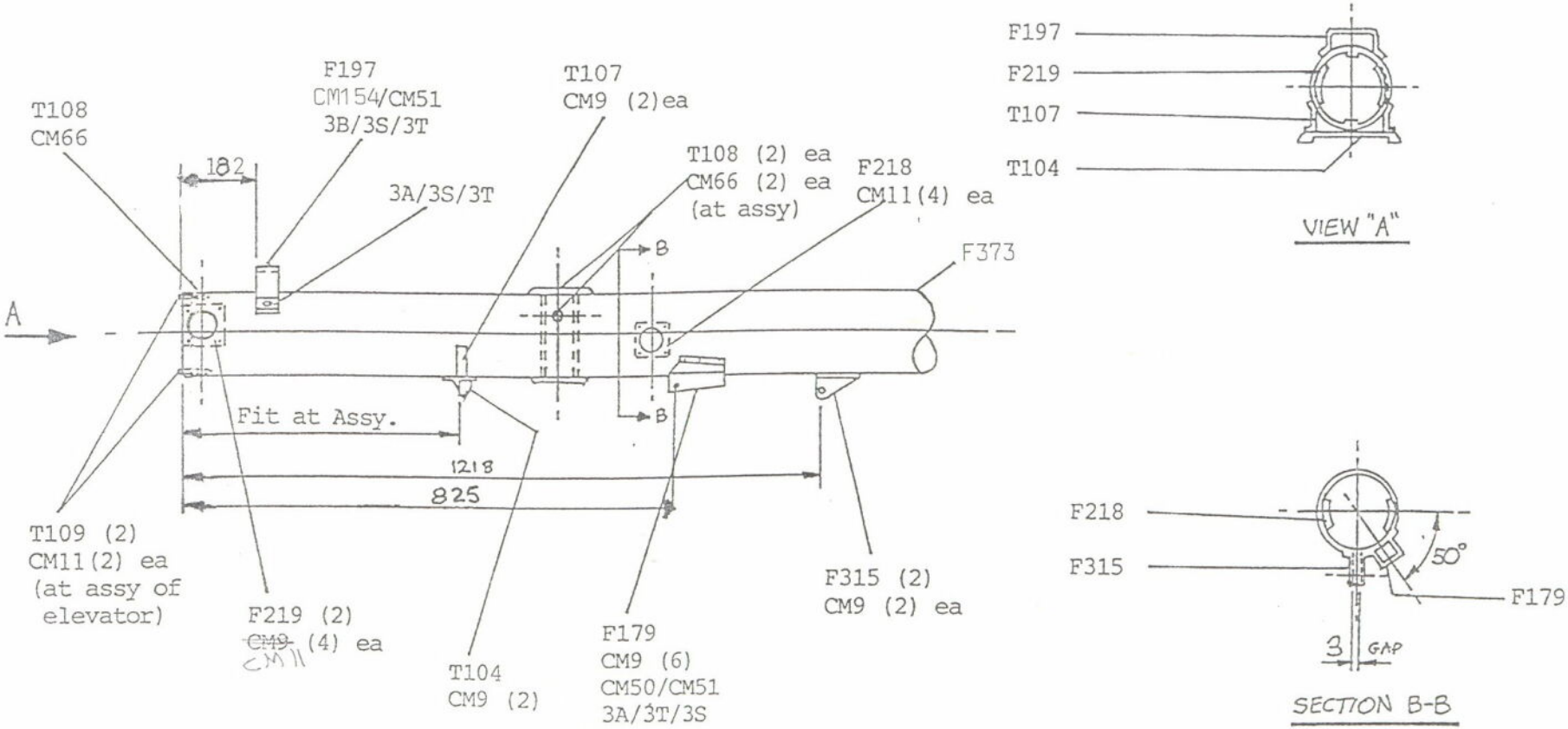
T108
CM66
F197
CM154/CM51
3B/3S/3T
182
3A/3S/3T
T107
CM9 (2)ea
T108 (2) ea
CM66 (2) ea
(at assy)
F218
CM11(4) ea
F373
A
B
B
Fit at Assy.
1218
825
T109 (2)
CM11(2) ea
(at assy of
elevator)
F219 (2)
~~CM9~~ (4) ea
CM11
T104
CM9 (2)
F179
CM9 (6)
CM50/CM51
3A/3T/3S
F315 (2)
CM9 (2) ea
F197
F219
T107
T104
VIEW "A"
F218
F315
50°
F179
3
GAP
SECTION B-B

FIGURE 28

RUDDER AND FIN

PART No.	QTY.	PART DESCRIPTION	NOTE	PROCESS REF.
T147	1	T.E. Tube - Fin	BOND	1.2
T151	1	Tailskid Insert		
T152	1	Tailskid		
T153	1	Tailskid		
T146	1	L.E. Fin	BOND	1.2
T148	4	Rib - Fin	BOND	1.8
T149	4	Gusset - Fin	BOND	1.8
T150	4	Gusset - Fin	BOND	1.8
T168	1	Bracket Fin Support		
T105	2	Hinge Rudder	*	
T154	1	L.E. Rudder	BOND	1.2
T155	1	T.E. Rudder	BOND	1.2
T156	1	Channel Rudder	BOND	1.2
T157	1	Rib - Rudder	BOND	1.8

NOTE * - fit after INSPECTION and COVERING.

FIGURE 28

RUDDER AND FIN

PART No.	QTY.	PART DESCRIPTION	NOTE	PROCESS REF.
T158	1	Rib Rudder	BOND	1.8
T159	1	Rib Rudder	BOND	1.8
T160	1	Rib Rudder	BOND	1.8
T161	2	Gusset Rudder	BOND	1.8
T162	2	Gusset Rudder	BOND	1.8
T163	2	Gusset Rudder	BOND	1.8
T164	2	Gusset Rudder	BOND	1.8
T165	2	Gusset Rudder	BOND	1.8
T103	2	Gusset Rudder Horn		

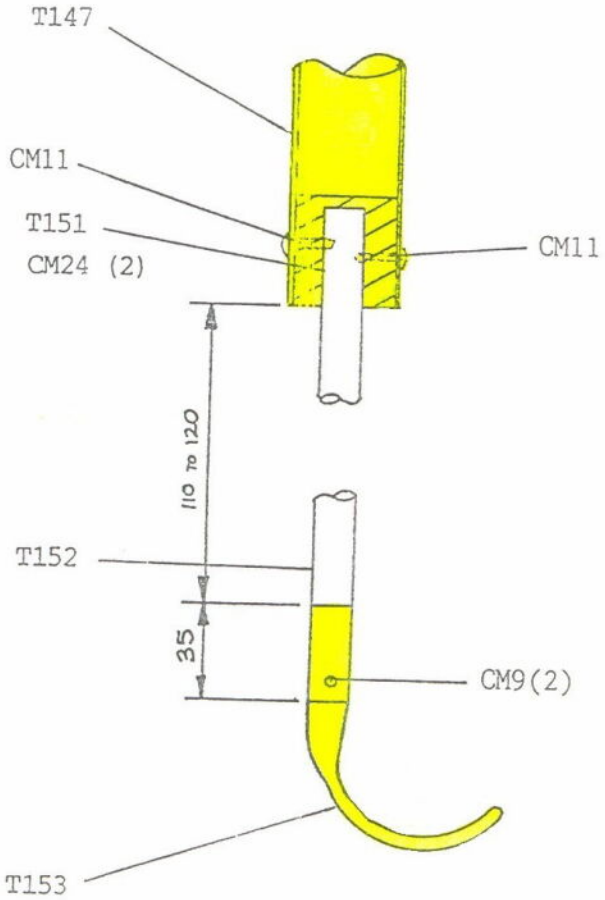

FIGURE 28

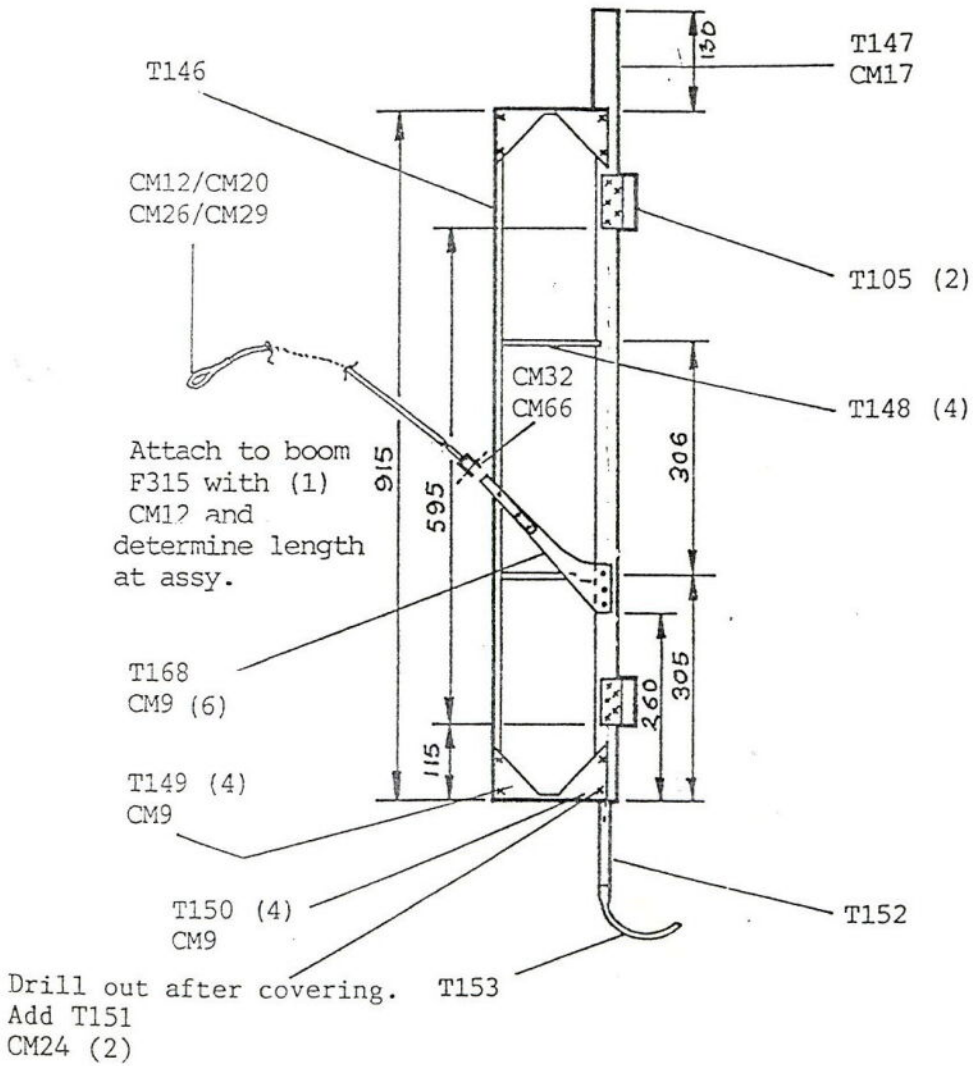
T146
T147
CM17
150
CM12/CM20
CM26/CM29
T105 (2)
CM32
CM66
T148 (4)
Attach to boom
F315 with (1)
CM12 and
determine length
at assy.
915
595
306
T168
CM9 (6)
260
305
115
T149 (4)
CM9
T150 (4)
CM9
T152
T153
Drill out after covering.
Add T151
CM24 (2)

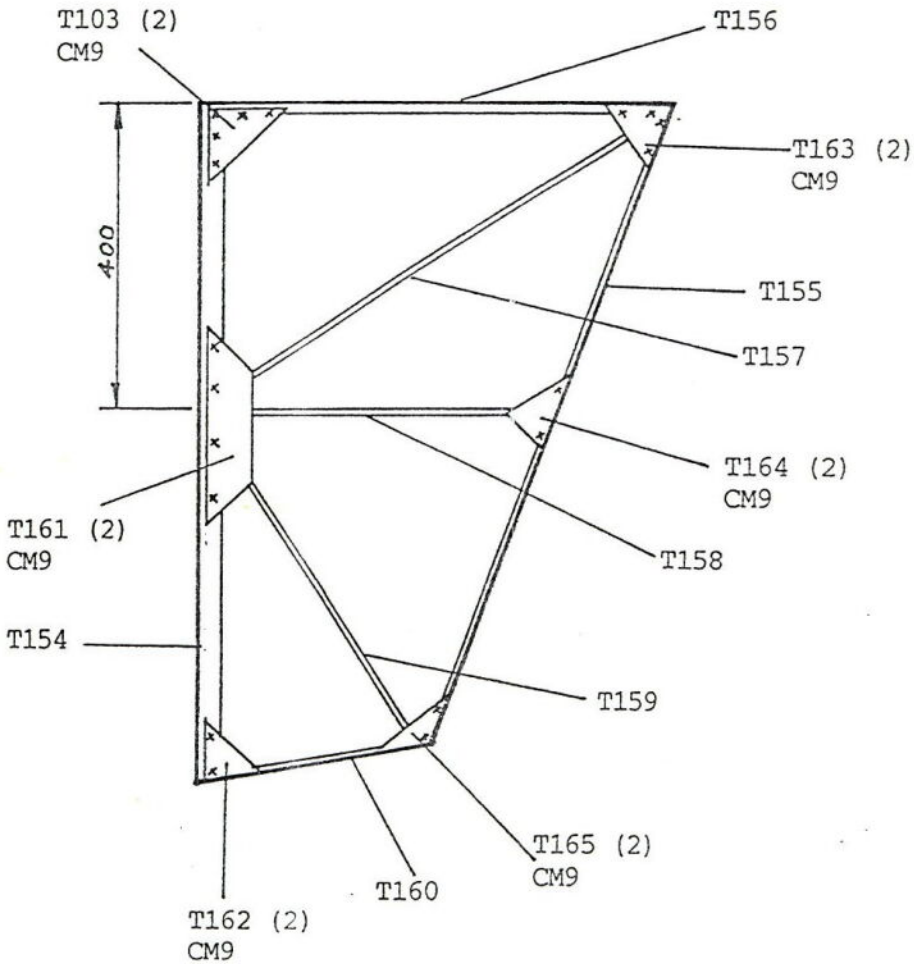
T103 (2)
CM9
T156
T163 (2)
CM9
400
T155
T157
T164 (2)
CM9
T161 (2)
CM9
T158
T154
T159
T165 (2)
CM9
T160
T162 (2)
CM9

FIGURE 29

ELEVATOR

PART No.	QTY.	PART DESCRIPTION	NOTE	PROCESS REF.
T133	1	L.E. Elevator	BOND	1.2
T134	1	T.E. Elevator	BOND	1.2
T135	1	Channel Elevator		
T136	2	Rib Elevator	BOND	1.8
T137	2	Rib Elevator	BOND	1.8
T138	4	Rib Elevator	BOND	1.8
T139	2	Rib Elevator	BOND	1.8
T103	2	Gusset Elevator Horn		
T140	8	Gusset Elevator	BOND	1.8
T141	4	Gusset Elevator	BOND	1.8
T142	2	Gusset Elevator	BOND	1.8
T143	4	Gusset Elevator	BOND	1.8
T144	4	Gusset Elevator	BOND	1.8
T102	1	Horn Elevator	BOND	1.8

Fit and rivet in position the 4 anchor nuts - 3R - before starting assembly.

FIGURE 29

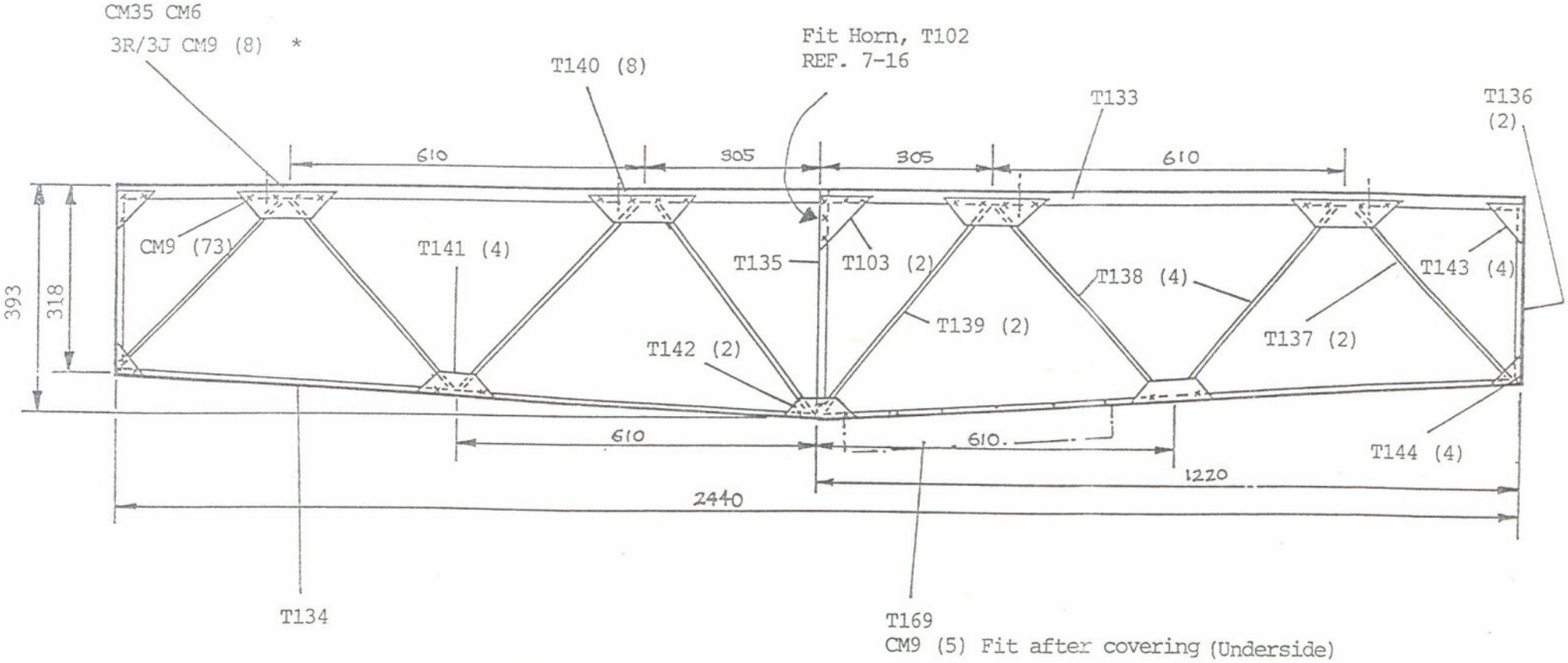

* Fit 3R Anchor Nuts prior to assy. on T133

FIGURE 30

TAILPLANE AND FINS

PART No.	QTY.	PART DESCRIPTION	NOTE	PROCESS REF.
T111	1	L.E. Tailplane PORT		
T112	1	L.E. Tailplane STB.		
T113	1	T.E. Tailplane PORT		
T114	1	T.E. Tailplane STB.		
T115	2	Channel Tailplane		
T118	2	Rib Tailplane	BOND	1.8
T119	1	Sleeve PORT		
T120	1	Sleeve PORT		
T121	1	Spacer STB.		
T122	1	Sleeve STB.		
T123	4	Gusset Tailplane		
T124	4	Gusset Tailplane		
T126	4	Gusset Tailplane		
T127	4	Gusset Tailplane	BOND	1.8

FIGURE 30

TAILPLANE AND FINS

PART No.	QTY.	PART DESCRIPTION	NOTE	PROCESS REF.
T128	4	Gusset Tailplane	BOND	1.8
T129	1	Insert Tailplane		
T167	1	Insert STB.		
T117	2	Fin Tailplane	*	1.4

* Bond in the inserts CM1 and CM2 using the same preparations and procedures as for the monocoque. Apply REDUX CM99 to the edges - PROCESS SHEET 5.

Select a tube the same diameter as the tailplane location holes in the boom and insert it. Lever the tube to the point where it aligns with the hole on the other side of the boom. Repeat for the other side. The tube should now pass through both holes with no play. Do not file out the holes - this will result in play from the tailplane in flight.

Rivet on the sleeves, T119 and T120, onto the PORT L.E. and T.E. Place in boom and ensure they are fully through the boom. Check for symmetry and making sure the PORT tailplane is flat, attach the T.E. to the L.E. Fit T115, Channel. Withdraw and build STARBOARD side to mate, less Channel T115.
Re-install and making sure ends are butted fully home, fit T115 to the STARBOARD side.

FIGURE 30

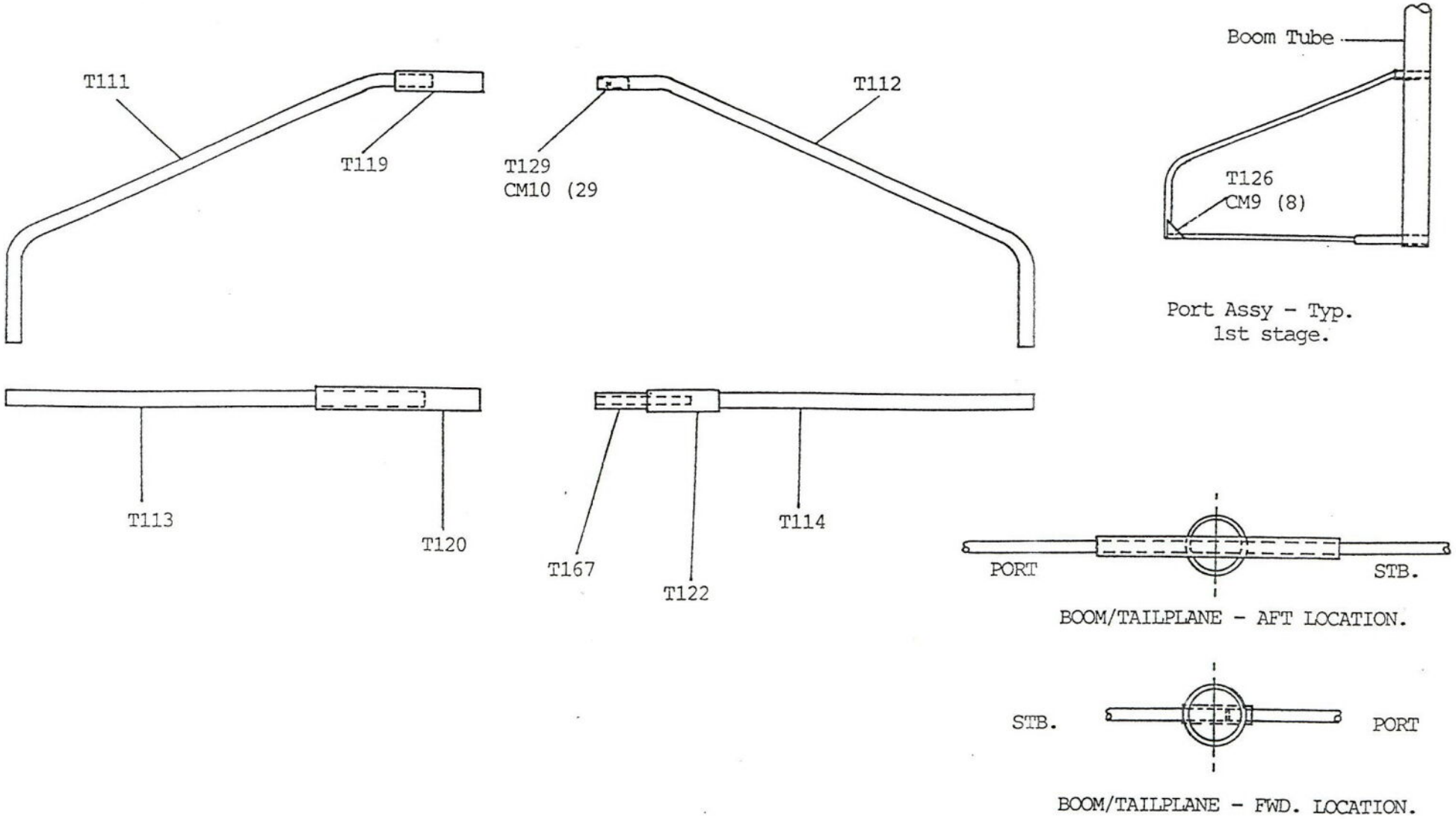
T111
T119
T129
CM10 (29
T112
Boom Tube
T126
CM9 (8)
Port Assy - Typ.
1st stage.
T113
T120
T167
T122
T114
PORT
STB.
BOOM/TAILPLANE - AFT LOCATION.
STB.
PORT
BOOM/TAILPLANE - FWD. LOCATION.

FIGURE 30

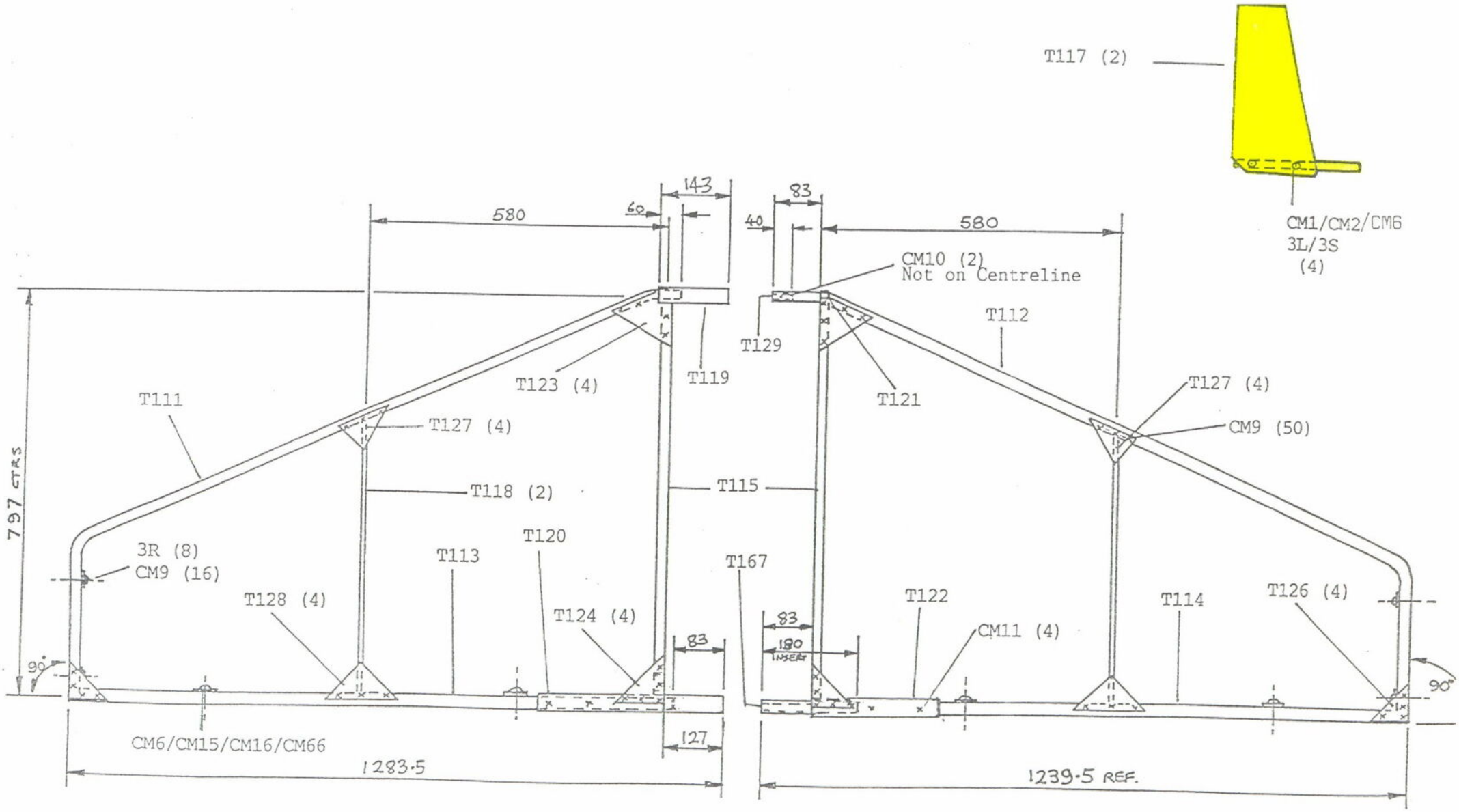
T117 (2)
CM1/CM2/CM6
3L/3S
(4)
143
83
580
60
40
580
CM10 (2)
Not on Centreline
T129
T112
T123 (4)
T119
T121
T127 (4)
T111
T127 (4)
CM9 (50)
797 CTRS
T118 (2)
T115
3R (8)
CM9 (16)
T113
T120
T167
T128 (4)
T124 (4)
T122
T114
T126 (4)
83
83
180
INSERT
CM11 (4)
90°
90°
CM6/CM15/CM16/CM66
127
1283·5
1239·5 REF.

FIGURE 30A

ELECTRIC ELEVATOR TRIMMER

PART No.	QTY.	PART DESCRIPTION	NOTE	PROCESS REF.
T170	1	PUSH/PULL TUBE		
T171	1	HINGE		
T172	1	TRIM TAB		
T173	1	HORN		
T177	1	SERVO MOUNT		

The Electric Elevator Trimmer allows the aircraft to be trimmed longitudinally for 'hands off' cruise flight range 50 KTS - 75 KTS. The engine electrical supply powers the trimmer. No separate power source is required.

DRG. T174

Mark out cutouts for rocker switch (CM109) on port console in front of the throttle and for indicator tell-tale lights on dash panel. Use a drill initially and then file the holes to shape. A careful fit of parts will not necessitate fixing screws.

DRG. T178

This bracket, fixed at the rear end of the boom is the holder for the electric connector shell. Fix with (3) CM11 pop rivets (1/8" dia. medium).

DRG. T175

The elevator has to have a portion of the covering surface removed to let the servo (CM108) be attached. Mark out this area on the elevator underside. Fit servo using (3) CM9 rivets (1/8" dia. short). Replace the fabric using Bostik No.1 Clear Adhesive and a coat of Clear Dope when unit installation is complete.

Attach trim tab (T172) to underside of elevator trailing edge using (5) CM9 rivets. Be careful to drill the elevator trailing edge exactly in the middle of the round tube. Connect push/pull rod (T170) to the servo using clevis pin (CM119) and secure with cotter pin (CM30).

Before attaching push/pull tube to the horn (T173), the tell-tale green (neutral) light must show and the tab be set at 5° DOWN. This position is neutral. Mark position of hole on push/pull tube to horn and drill 1/8" dia. for clevis and cotter safety pins (CM119 & CM30).

FIGURE 30A

Drawing No. T174

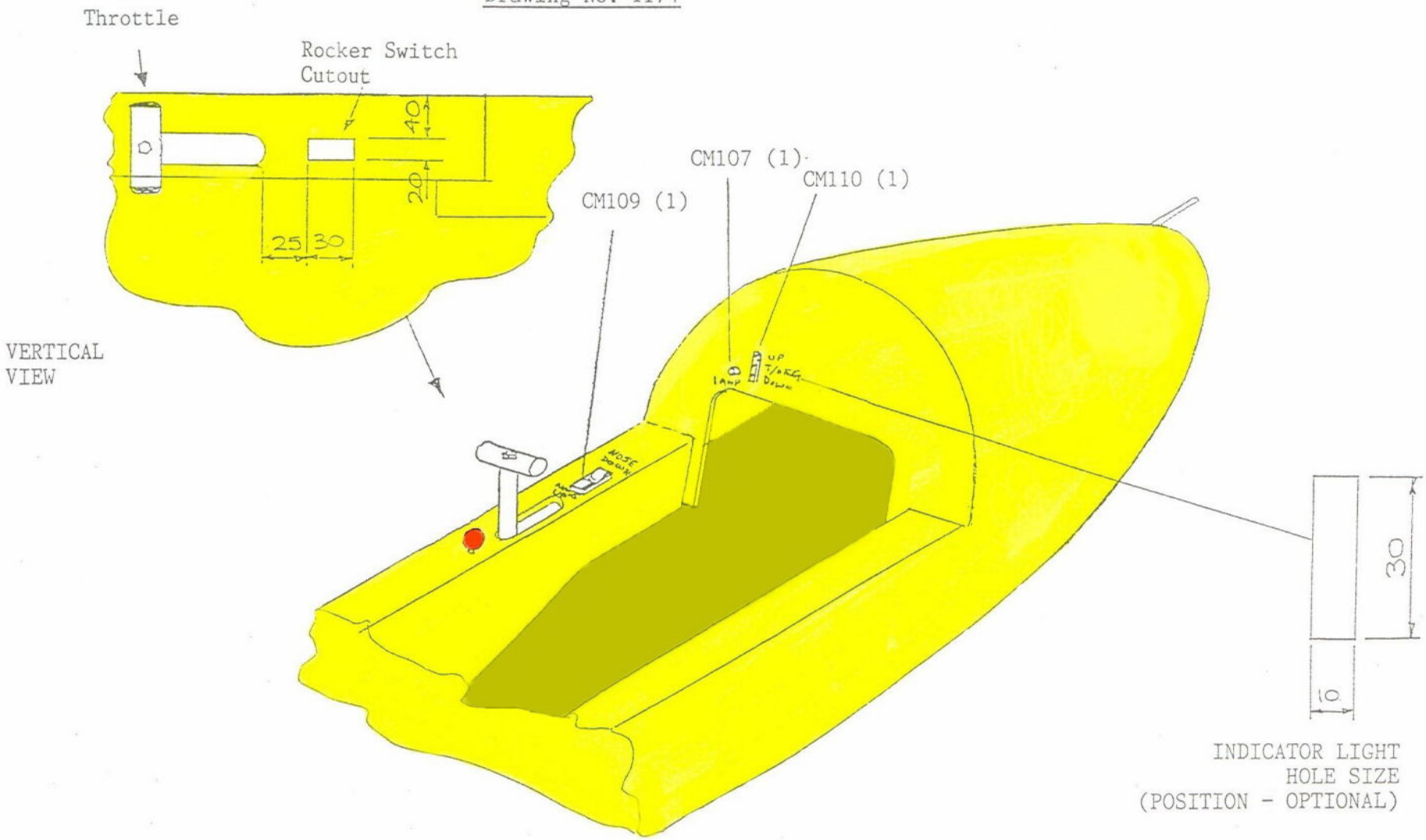

FIGURE 30A

Drawing No. T175

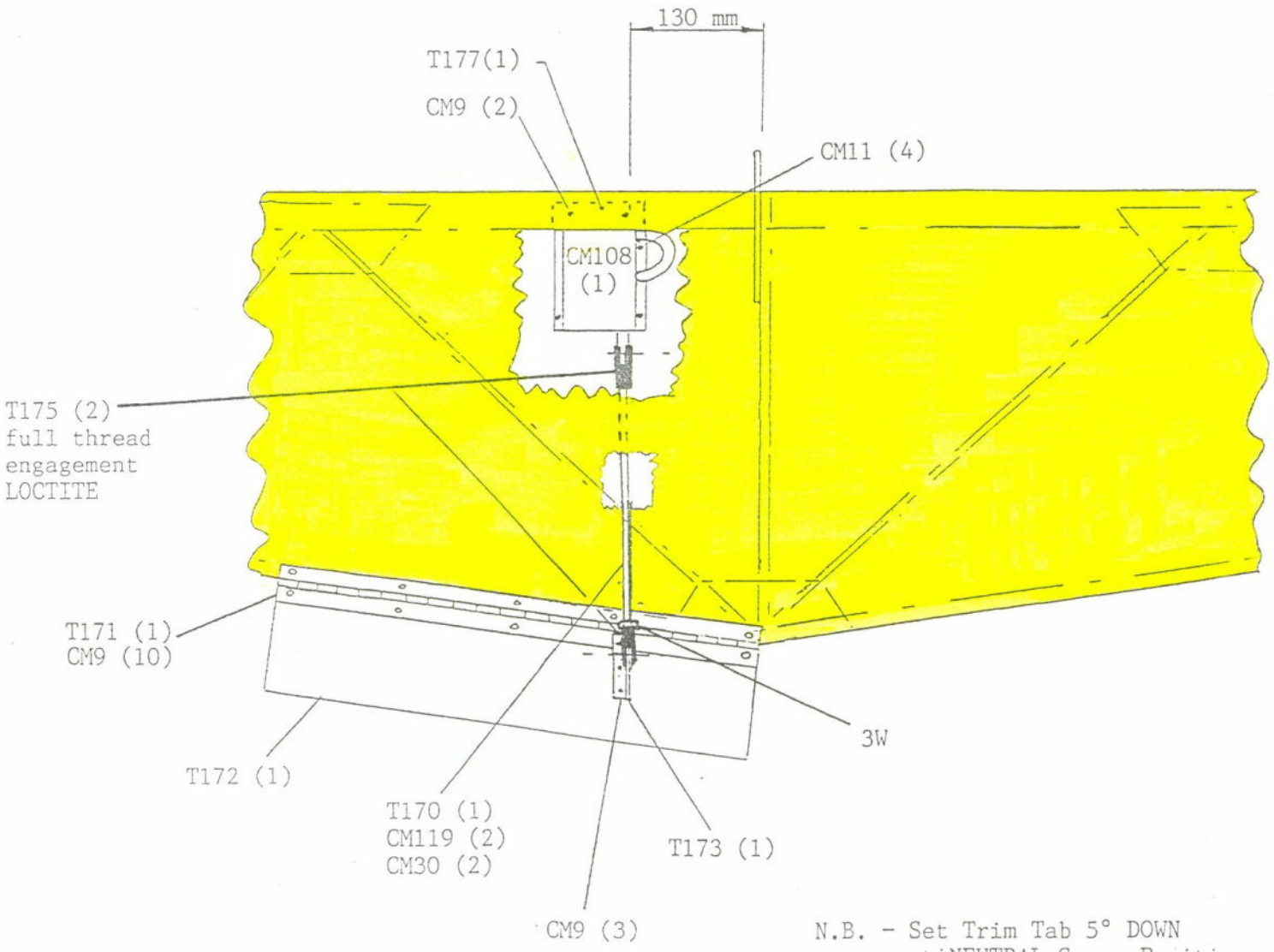

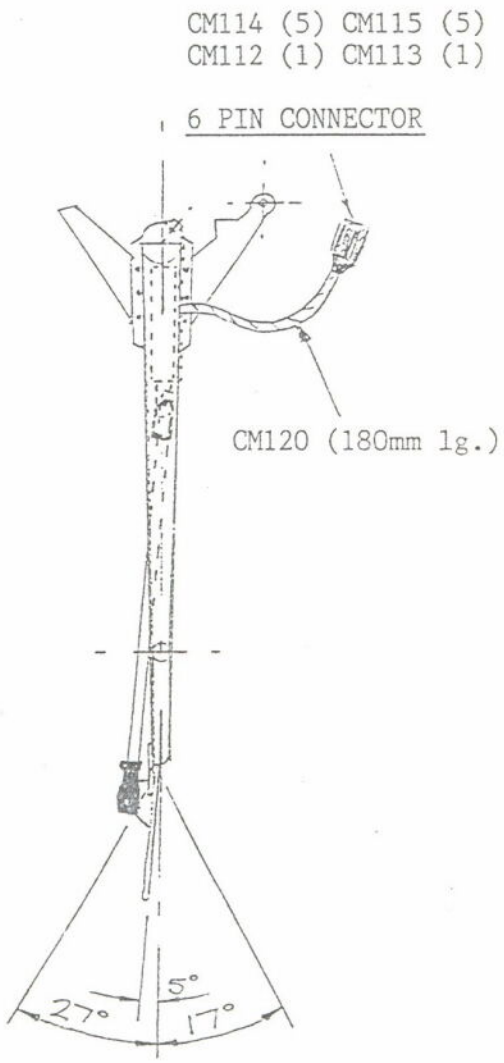

N.B. - Set Trim Tab 5° DOWN
at NEUTRAL Servo Position.

FIGURE 30A

Drawing No. T176

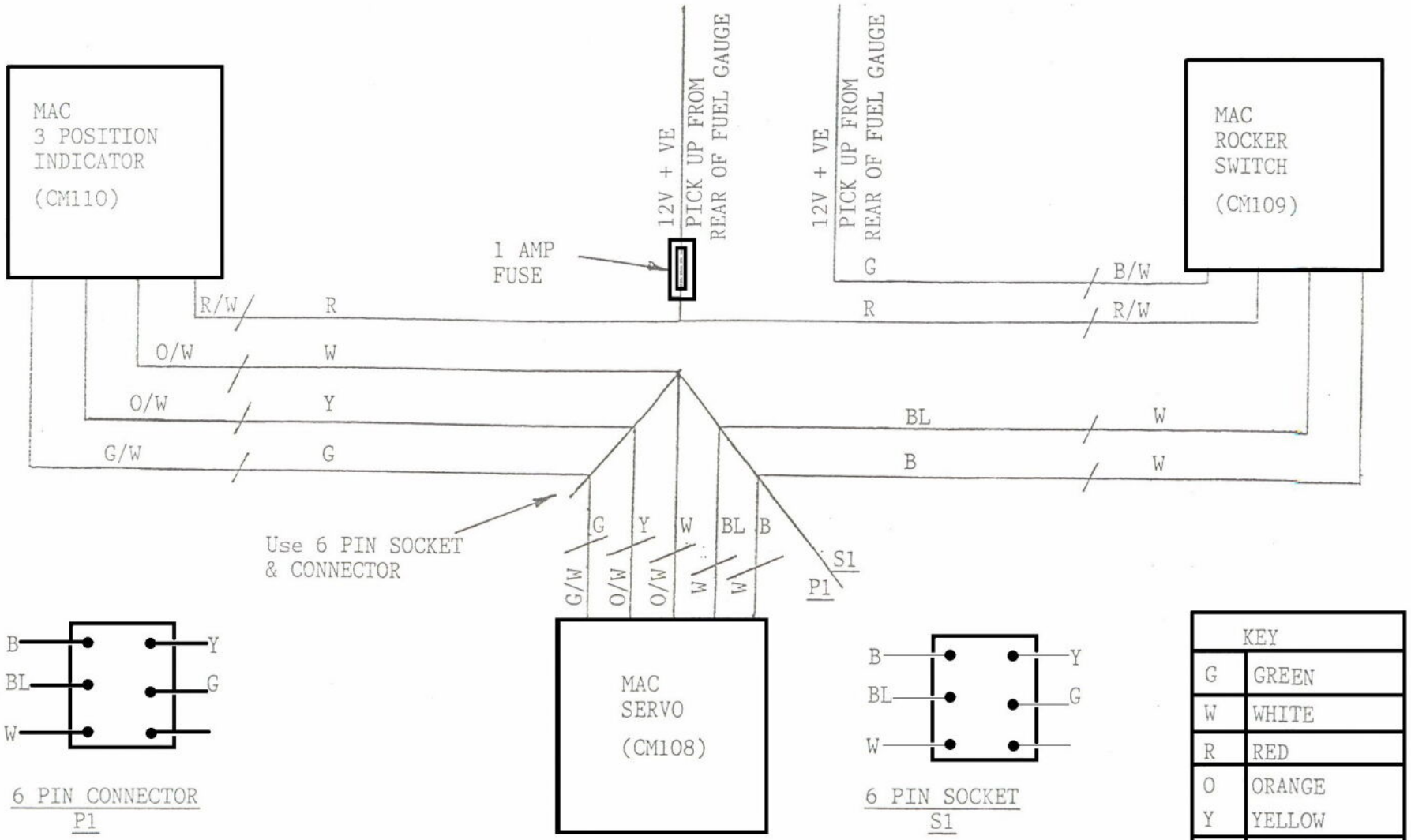

KEY	
G	GREEN
W	WHITE
R	RED
O	ORANGE
Y	YELLOW
BL	BLACK
B	BLUE

FIGURE 30

Drawing No. T178

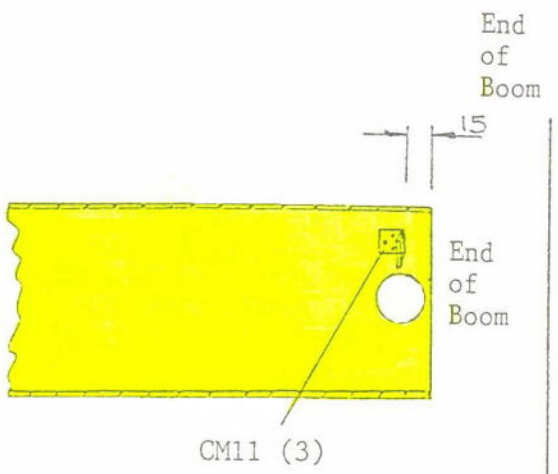

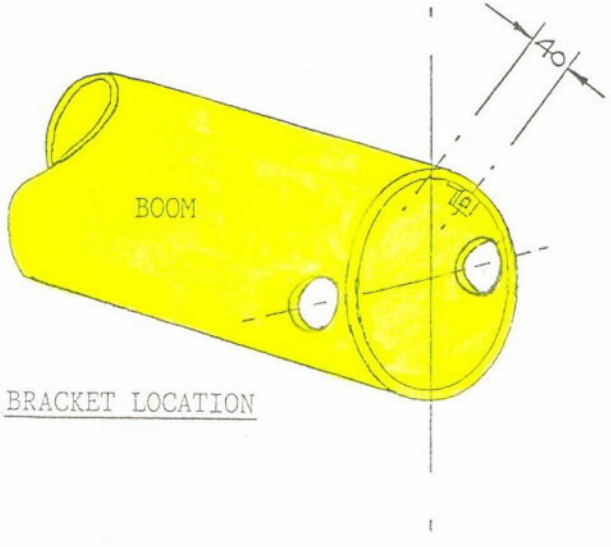

BRACKET LOCATION

REMOVE SHARP EDGES

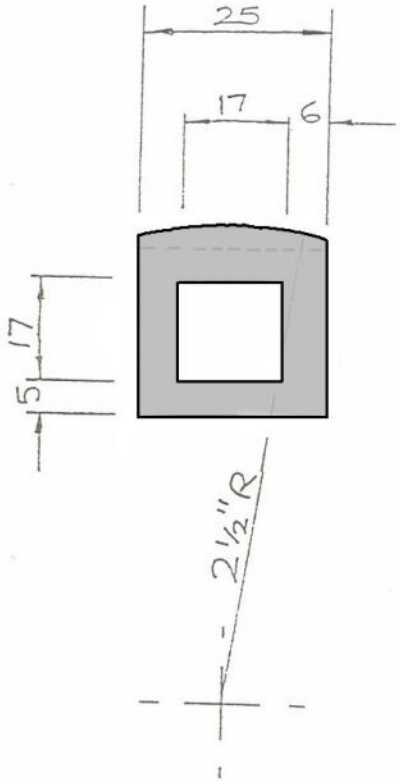

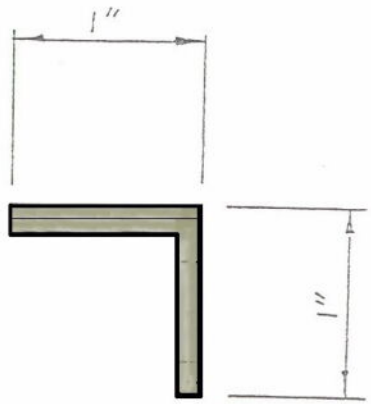

Material 1" x 1" x 1/8" HE30TF
Angle required (1).

INSPECTION

Ensure this inspection is effected and recorded on page F before proceeding with covering and painting.

COVERING AND PAINTING

Whether to cover and then paint or paint and then cover depends on the type of paint selected.

When using Inmont Paint the fabric can be attached to the painted surface. If ICI Spectrum 2-Pack Paint is used then the fabric should be attached to the primer surface only prior to painting.

When you have decided on the type of paint you require you MUST consult with CFM Metal-Fax Ltd. prior to proceeding with the covering and painting.